VEXVE iSENSE™

Smart monitoring solutions for district energy networks

Real time underground network data – a game changer in optimization

March 26th, 2021 BSAM training course

Speaker introduction

Maria Kalli
Director, Sales & Marketing, Vexve Oy

- Responsible for the sales, customer service and marketing organization and business development
- Project owner of Vexve Smart Solutions new technologies development project, which later became a full commercial portfolio of iSENSE product family
- Member of Vexve Armatury Group and Vexve Oy executive teams

maria.kalli@vexve.com | +358 50 3791 730

Maria Kalli Vexve

VEXVE VEXVE ARMATURY GROUP

Vexve Oy – globally leading manufacturer of valve solutions for district energy

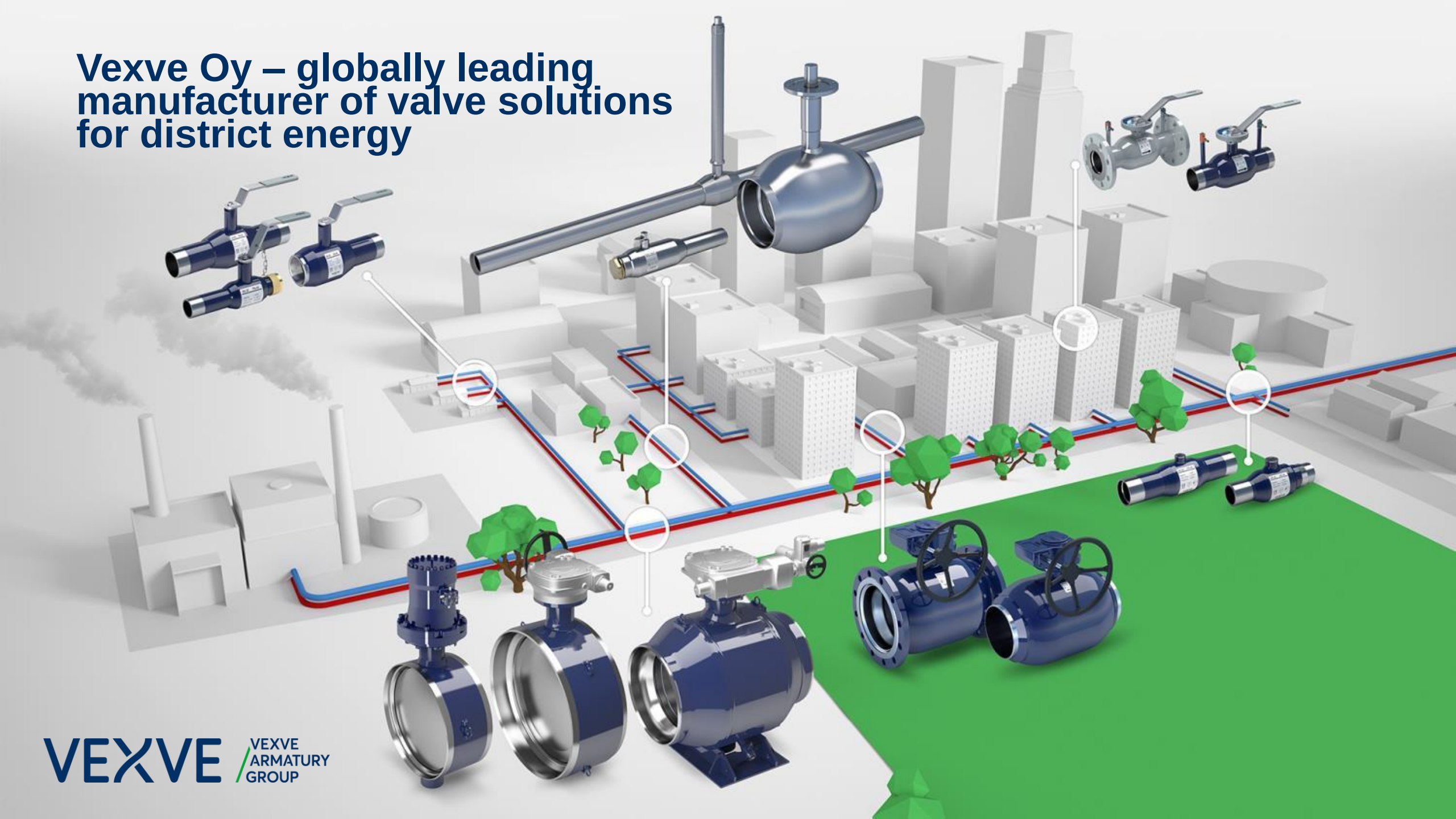

VEXVE VEXVE ARMATURY GROUP

Optimization
in traditional district energy systems

Intelligence in traditional district energy systems

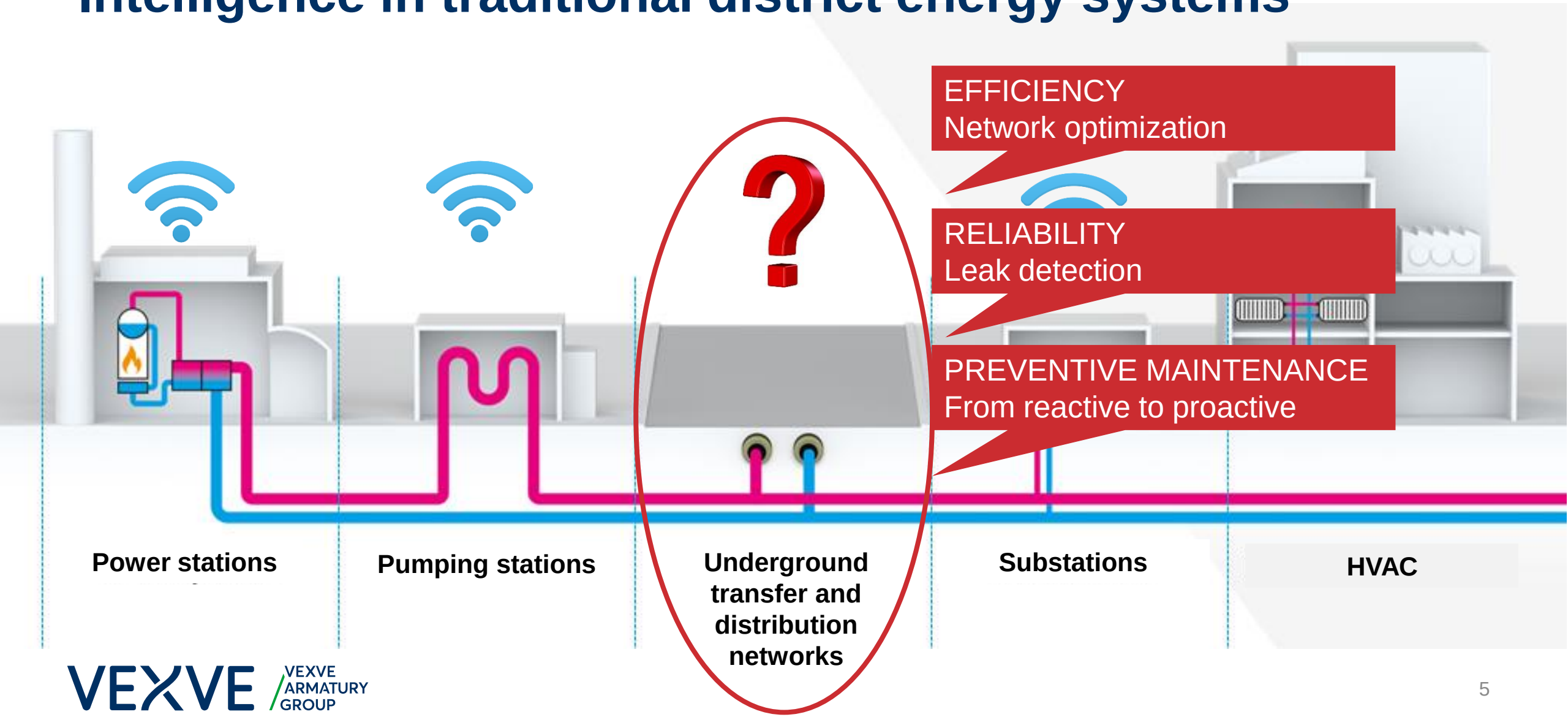

VEXVE VEXVE ARMATURY GROUP

Typical network challenges

“Most of the heat loss happens in the network, but without measurement data it is difficult to know where exactly”

”Network conditions are not known and network is run with high safety factors to ensure adequate heat supply to the most challenging parts of the network”

”Decentralized heat production and ring networks are making the networks more complex, and creating unfavorable flow directions and unknown heat distribution.”

Efficiency in district energy systems

Average heat loss in district energy systems

- *DN150 and bigger 5-10 %*
- *DN50 10-20%*

Energy utilities estimated 1 %-point improvement in efficiency resulting to savings of

- *EUR 100.000 per year in small networks*
- *> EUR 1.000.000 per year in large networks*

Pipework (technical equipment and insulation)

By-pass loops with continuous flow

Peak power plants with continuous flow

New underground technologies support optimization of complete district energy systems

iSENSE product family is specifically designed for district heating and cooling networks

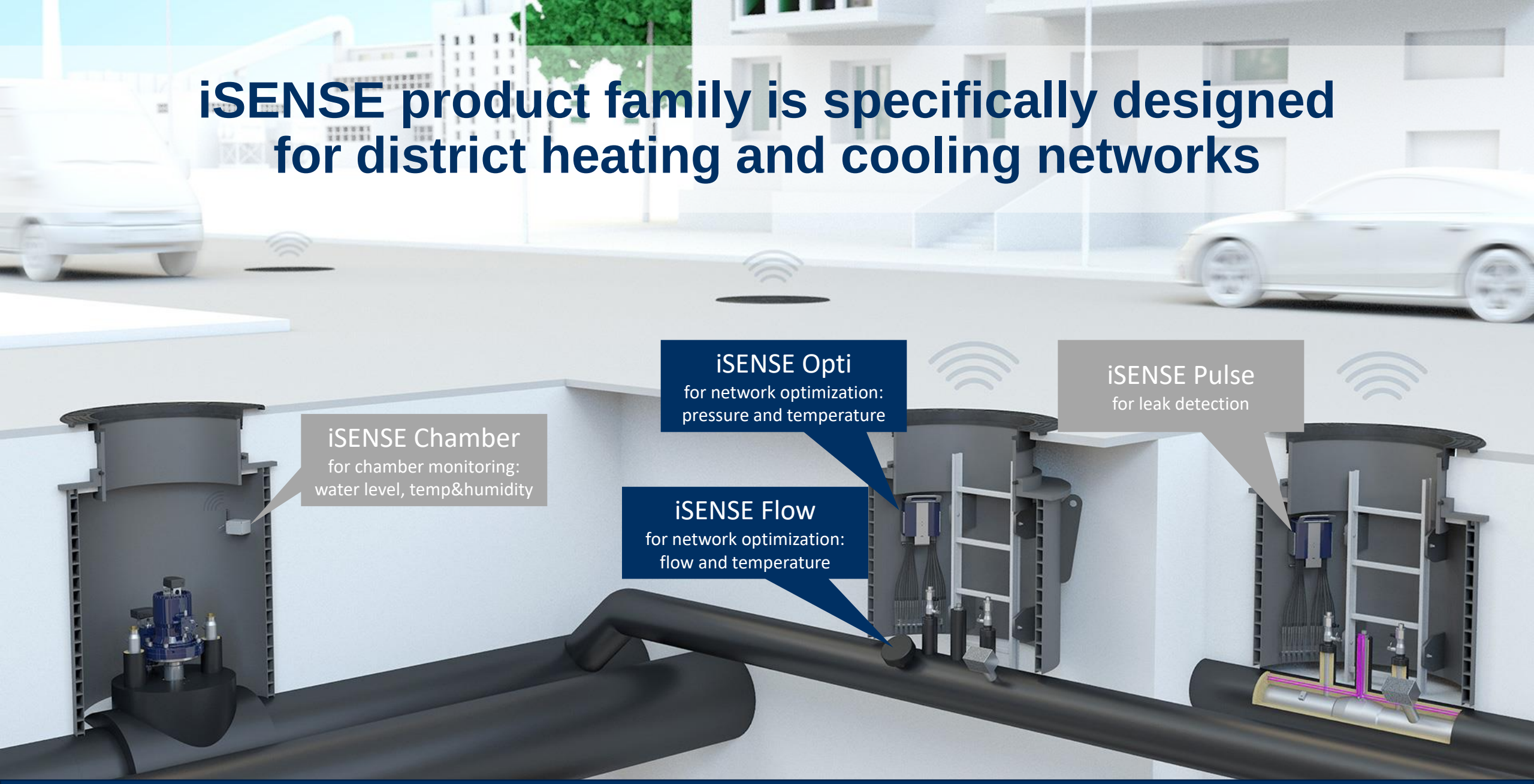

- ✓ **Underground use**
- ✓ **Wireless operation**
- ✓ **Self-powered**
- ✓ **Retrofittable**

VISUALLY – EFFICIENTLY – IN REAL TIME

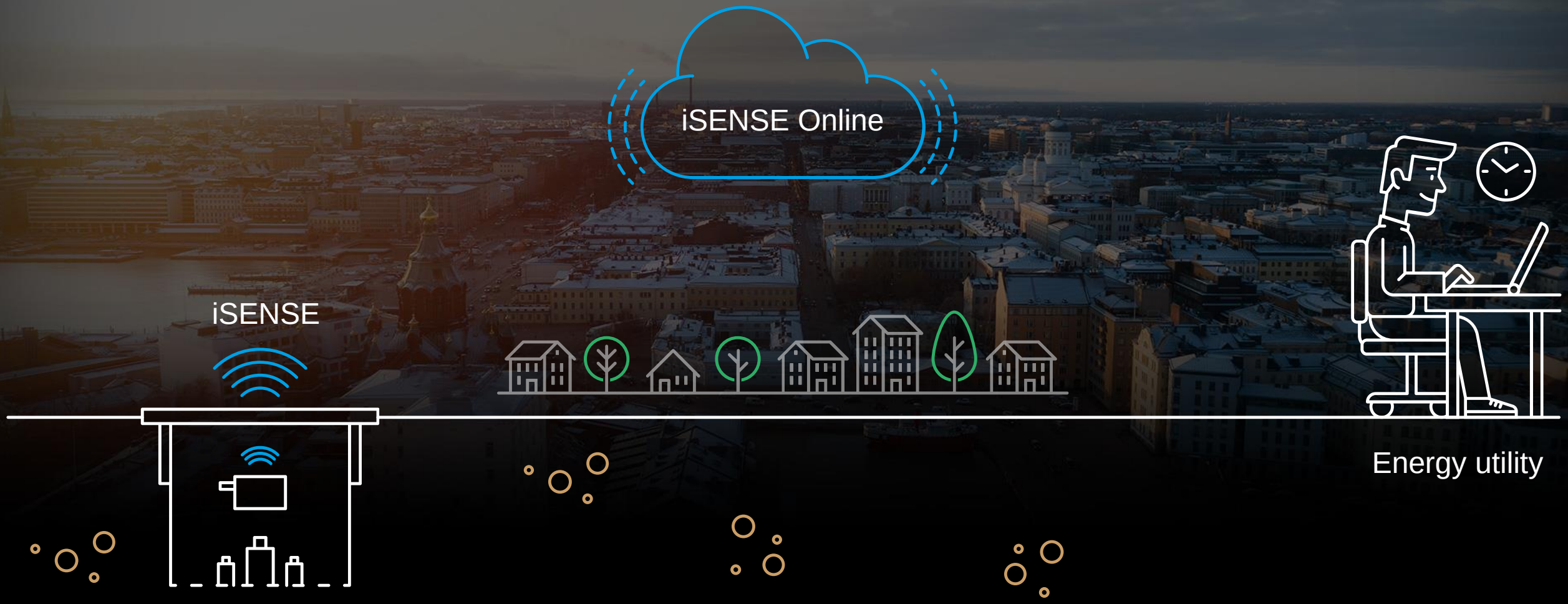

iSENSE Opti – real time network monitoring

iSENSE Opti supports optimization by providing accurate, measured data from the network. The data helps in detecting areas with exceptionally high heat loss, as well as areas which are cooled down due to unfavorable flow direction.

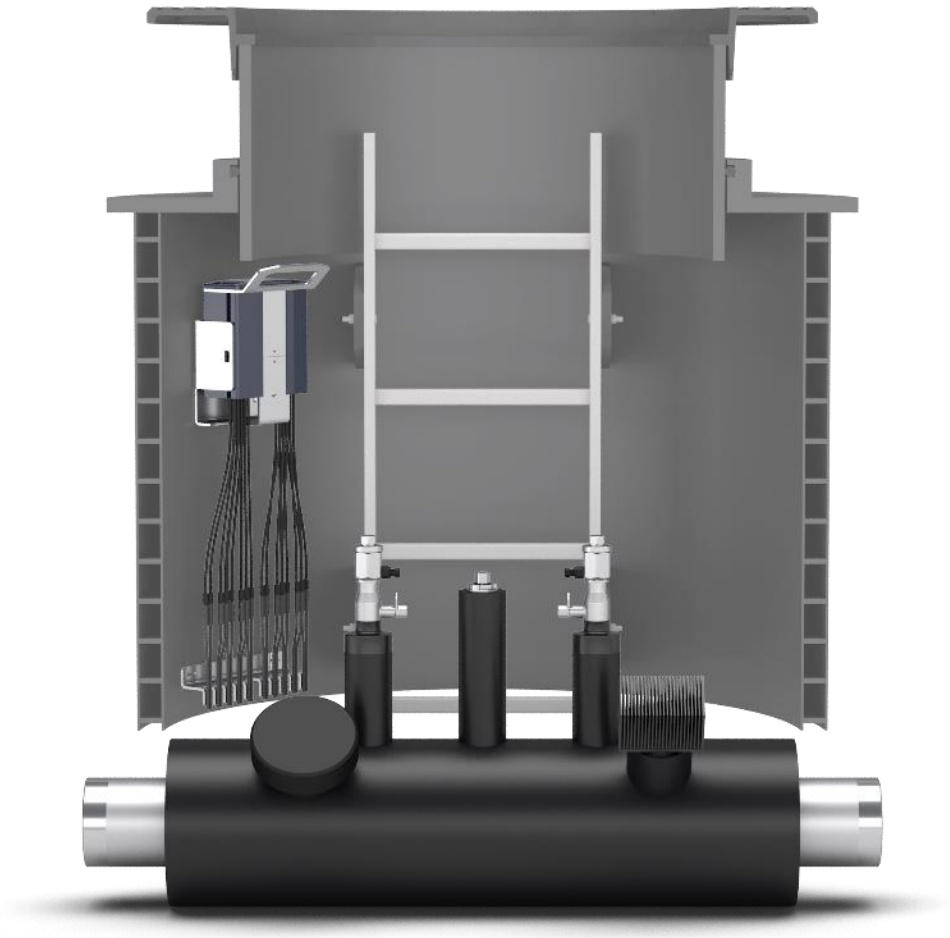

iSENSE Opti sensors

- Pressure 1 & 2
- Medium temperature 1 & 2
- Vibration (external or internal forces applied to the pipe)

iSENSE Opti smart unit

- One common equipment to collect and transfer all the measured data
- Durable and easy installation to the wall of the chamber
- Includes wireless LoRaWAN transmitter
- Sends information to iSENSE Online cloud service every 15 minutes
- Alcaline batteries 12 pcs C 1,5 V

Power supply options

- iSENSE Power thermoelectric generator
- AC power

Accessories: iSENSE Power – thermoelectric generator

- Energy is produced locally using the temperature difference between the district heating supply pipe and chamber ambient (required temperature difference min. 25 °C).
- Only one generator is enough to produce energy for both, supply and return line metering.
- If the required temperature difference is not reached (eg. seasonal variation), the equipment will temporarily use batteries.

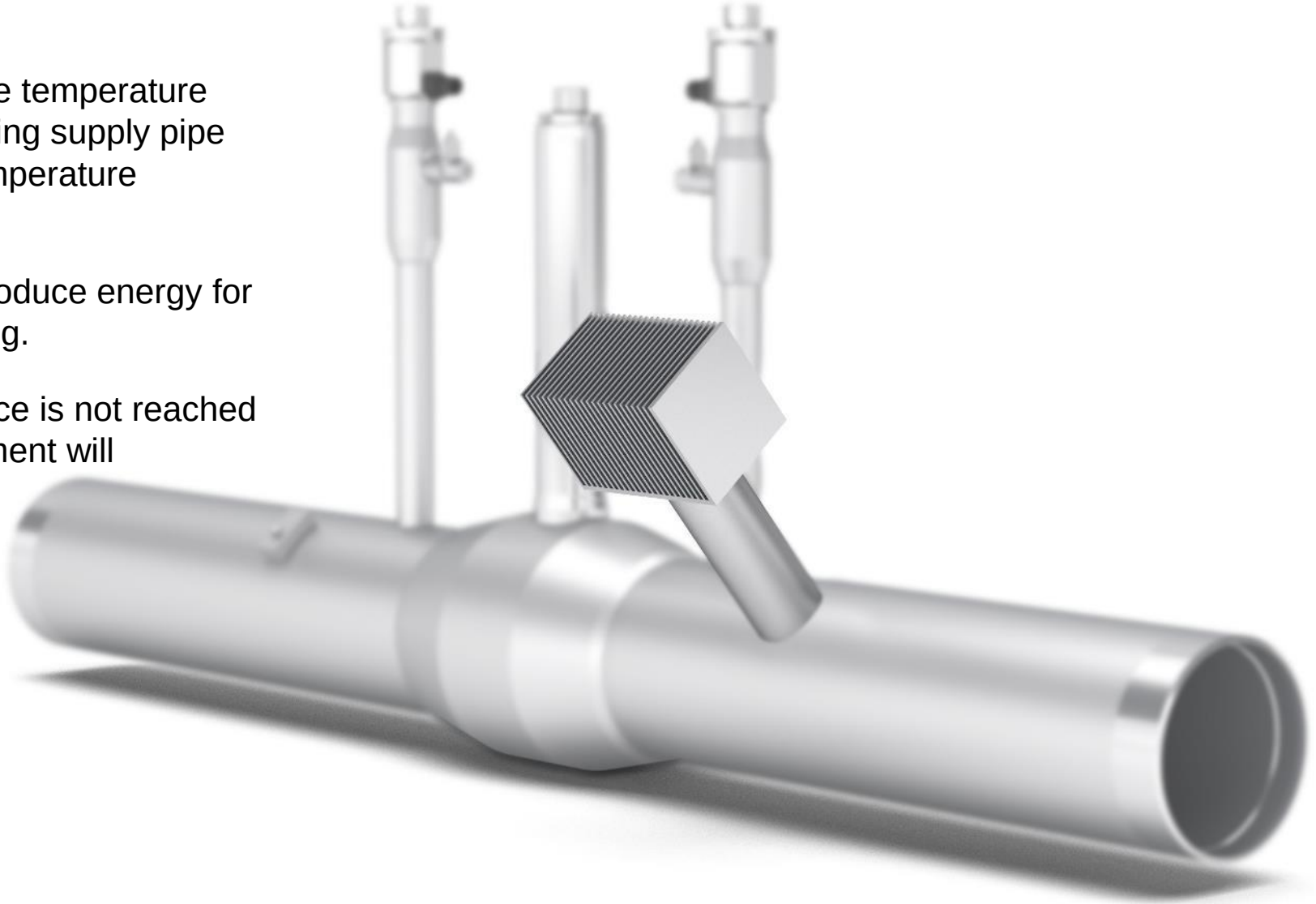

VEXVE VEXVE ARMATURY GROUP

iSENSE Flow – cost efficient flow measurement

iSENSE Flow is a new wireless solution for measuring flow and changing network conditions. The data supports energy utilities in network optimization, monitoring regional heat consumption and validating calculational network models.

iSENSE Flow sensors

- Flow based on calorimetric sensor
- Medium temperature

iSENSE Opti smart unit

- Collect and transfer all the measured data
- Durable and easy installation to the wall of the chamber
- Includes wireless LoRaWAN transmitter
- Sends information to iSENSE Online cloud service every 15 minutes
- Alcaline batteries 12 pcs C 1,5 V

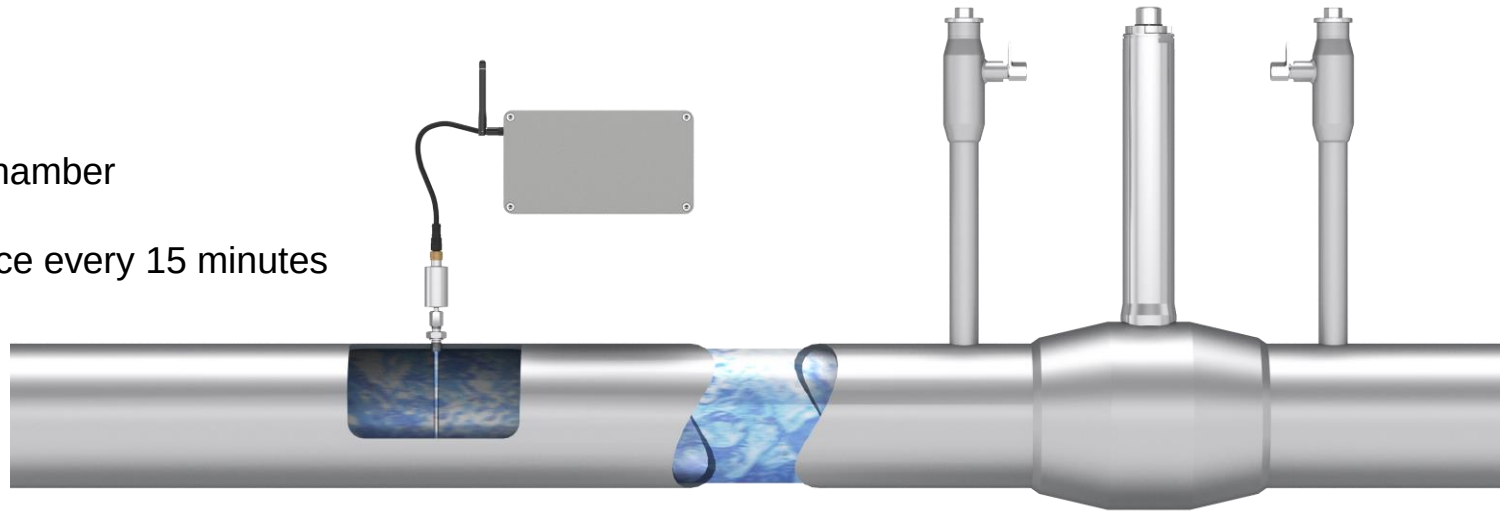

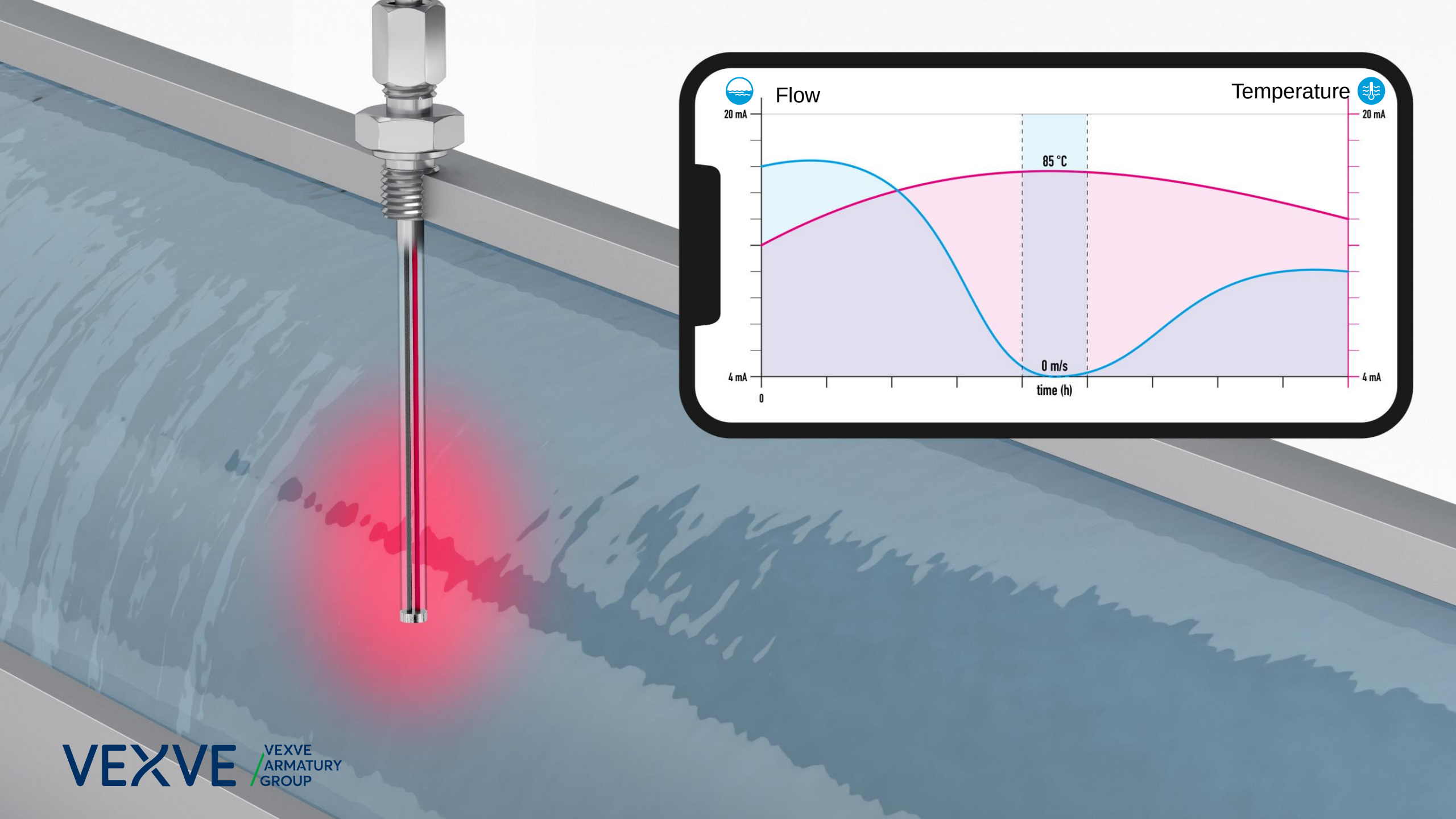

VEXVE
VEXVE ARMATURY GROUP

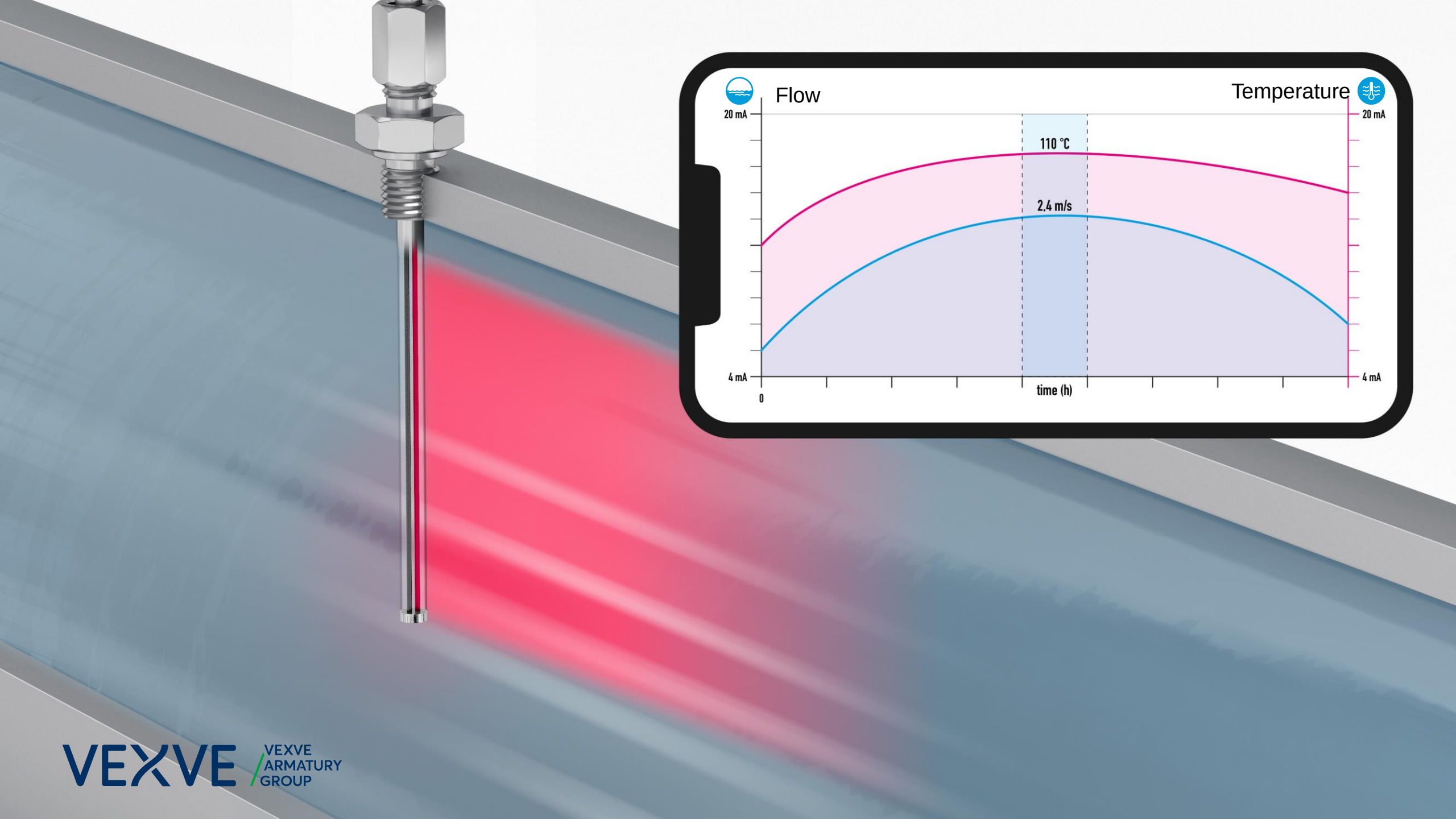

VEXVE
VEXVE ARMATURY GROUP

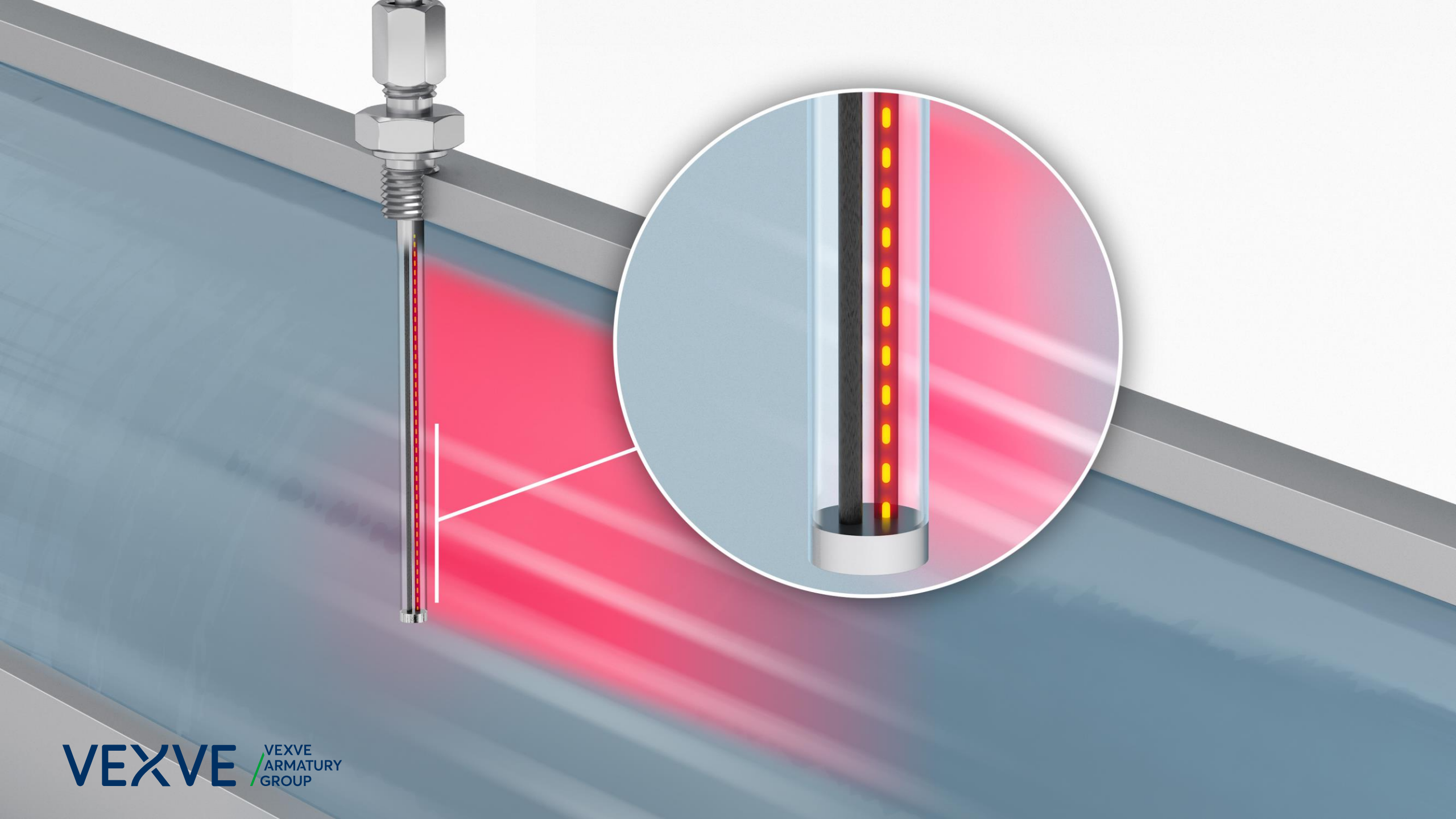
VEXVE
VEXVE
ARMATURY
GROUP

iSENSE product family uses LoRaWAN for data transmission

The benefits of LoRaWAN network for use in district energy networks:

- wireless
- energy efficient
- good underground operating
- easy deployment

For those areas where there is no existing LoRaWAN coverage, a network can be built regionally or nationwide. The coverage of the LoRaWAN network is determined on a project-by-project basis with the local operator.

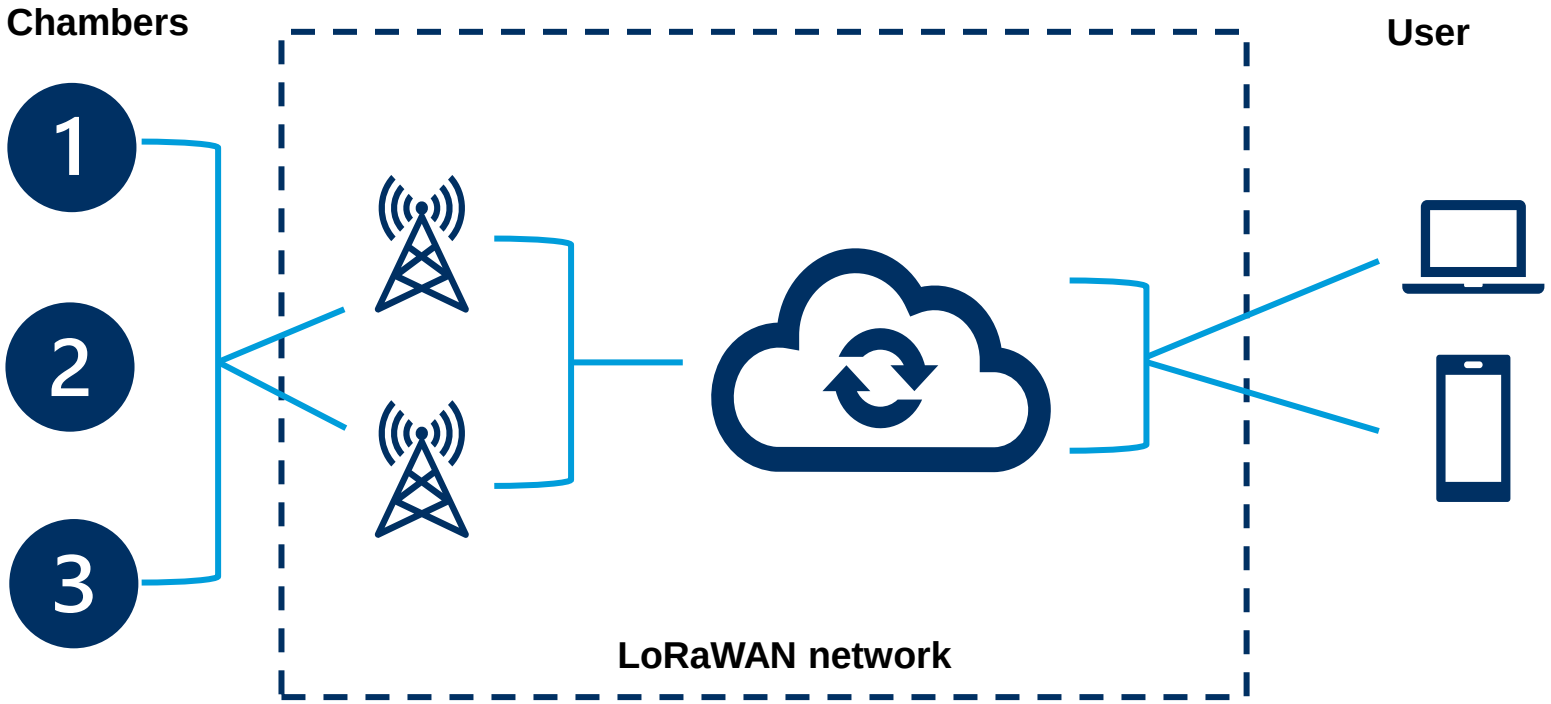

iSENSE Online cloud service

iSENSE Online cloud service is available from all devices, anywhere, anytime, with SSL-protected login.

- Measurements and alarms can be viewed in sensor-specific graphs or in map view
- An alarm can be set for each measurement, the channel for the alarm notice can be, for example, a text message or an e-mail
- The event log shows the active and acknowledged alarms for each measurement
- Integrations to customer’s own systems are available via open API-interfaces

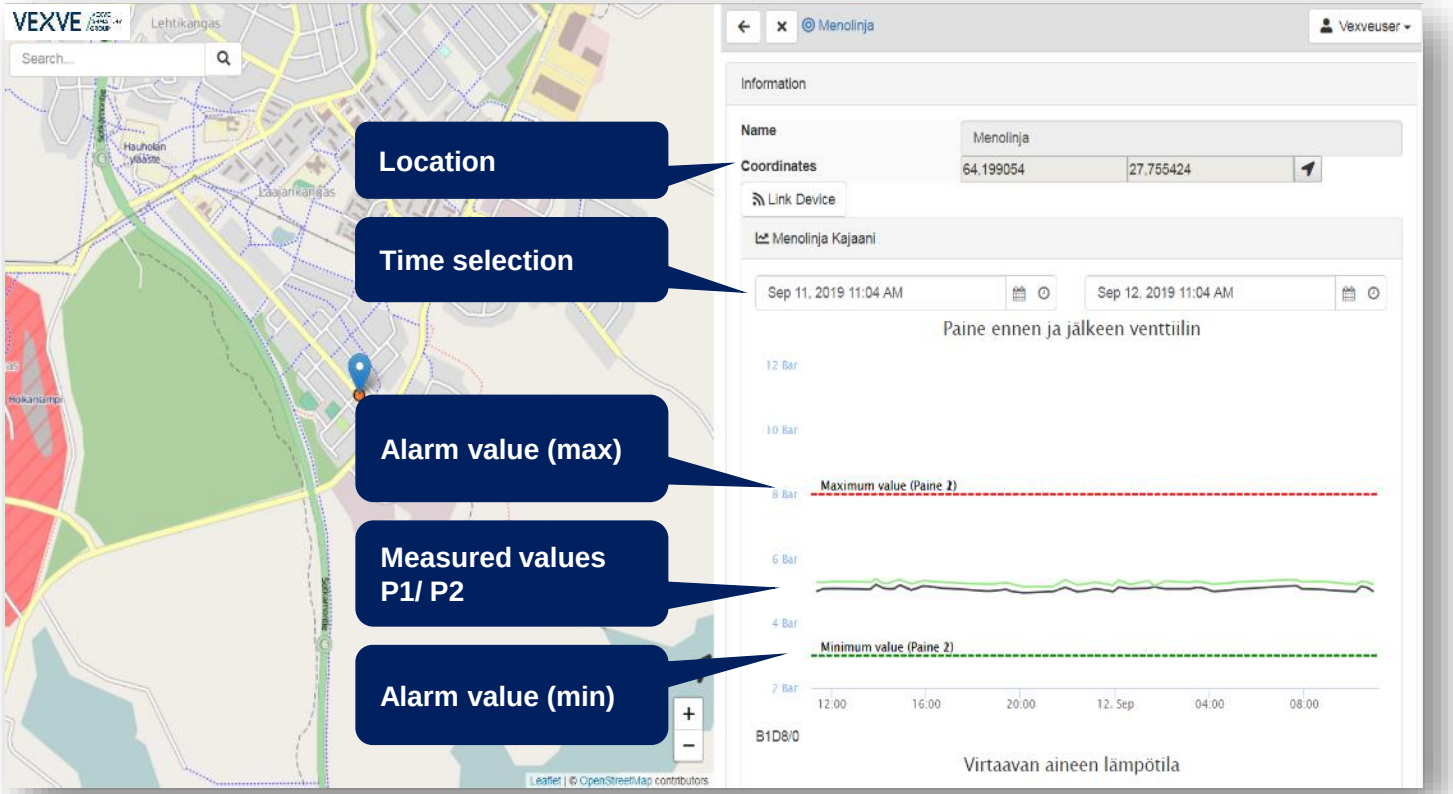

Customers voice
Fortum Power and Heat Oy, Espoo, Finland

iSENSE Flow – case Fortum: flow measurement to support Digital Twin simulation model

”Fortum has initiated a Digital Twin project to build a next generation energy system optimization platform. It utilizes detailed level real-time dynamic district heating network simulation model, which is continuously up-to-date with the real network.

The new Vexve iSense calorimetric sensors enable monitoring of real-time regional heat consumption and energy balance between different regions. Those are required for precise and up-to-date online Digital Twin simulation model.”

Viki Kaasinen,
Leading Smart Energy System Development
Fortum Heating and Cooling division

Key findings

New technologies support energy systems in reaching their optimization goals

- As a rule of thumb 80% of energy utilities assets are tied on underground network, but currently it is underused in optimization, mainly due to lack of suitable technologies
- New technologies are available and specifically designed for district heating and cooling networks (underground use, wireless, self-powered and retrofittable)
- Using underground data is increasing its importance in modern district energy networks, which are more complex (several variable sources of heat, two-way district heating sales, ring networks)
- Decisions can be made based on measured and accurate data

INSPIRED BY
YOUR FLOW
VEXVE
VEXVE
ARMATURY
GROUP