JSC RĪGAS SILTUMS IMANTA POWERPLANT

AIVARS CERS

AKCIJU SABIEDRĪBA
RĪGAS SILTUMS

JSC RĪGAS SILTUMS cogeneration plants

- Imanta CPU – installed cogeneration capacity 48 MW_{el} and 48MW_{th};
- Keramikas 2a natural gas cogeneration plant - installed cogeneration capacity 2,33 MW_{el} un 3,2 MW_{th};
- Daugavgrīva woodchip coogeneration plant – steam turbine capacity 0,6 Mw_{el} 4,8 MW_{th};
- Viestura pr. 20b cogeneration plant – cogeneration capacity 0,5 Mw_{el} and 0,63 MW_{th}.

Imanta powerplant main equipment

Cogeneration Power Unit:

- Gas turbine- Rolls Royce RB 211-24GT, 32 MW_{el};
- HRSG- Transelektro Power 63t/h, 67 bar;
- Steam turbine B+V Industrietechnick MARC 4-H01, 16MW_{el}.

Imanta powerplant main equipment

District heating boilerhouse:

- 3 piece KVGM – 100 modernized district heating boilers, each boiler has capacity 116,3 MW_{th}, one of them equipped with 10 MW condensing economizer

- 1 piece steam boiler Vapor TTK-300 SH with capacity 12 t/h (8,5 MW_{th}).

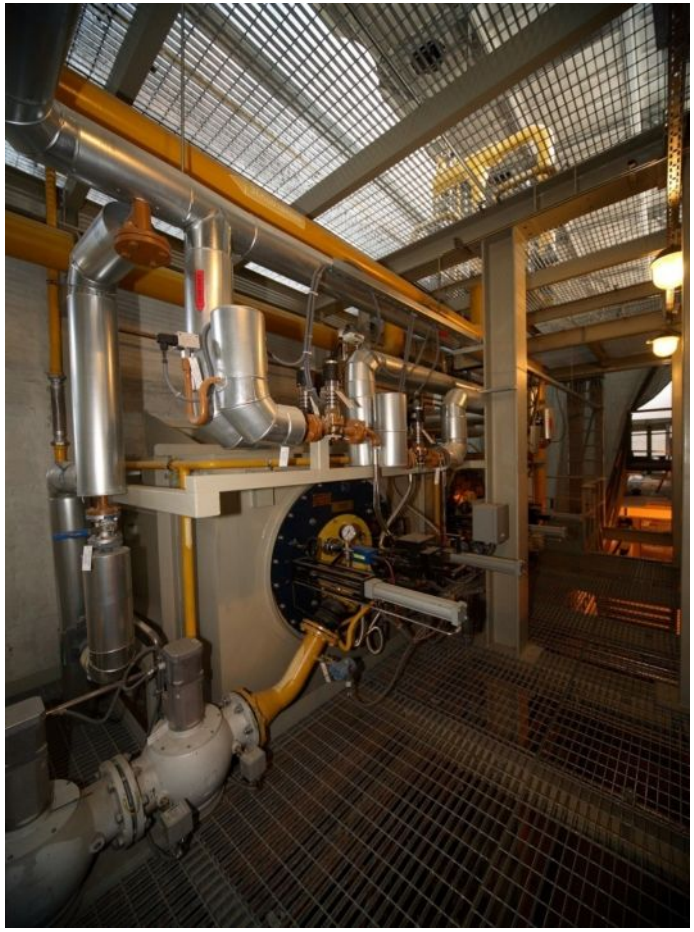

Powerplant loading graph

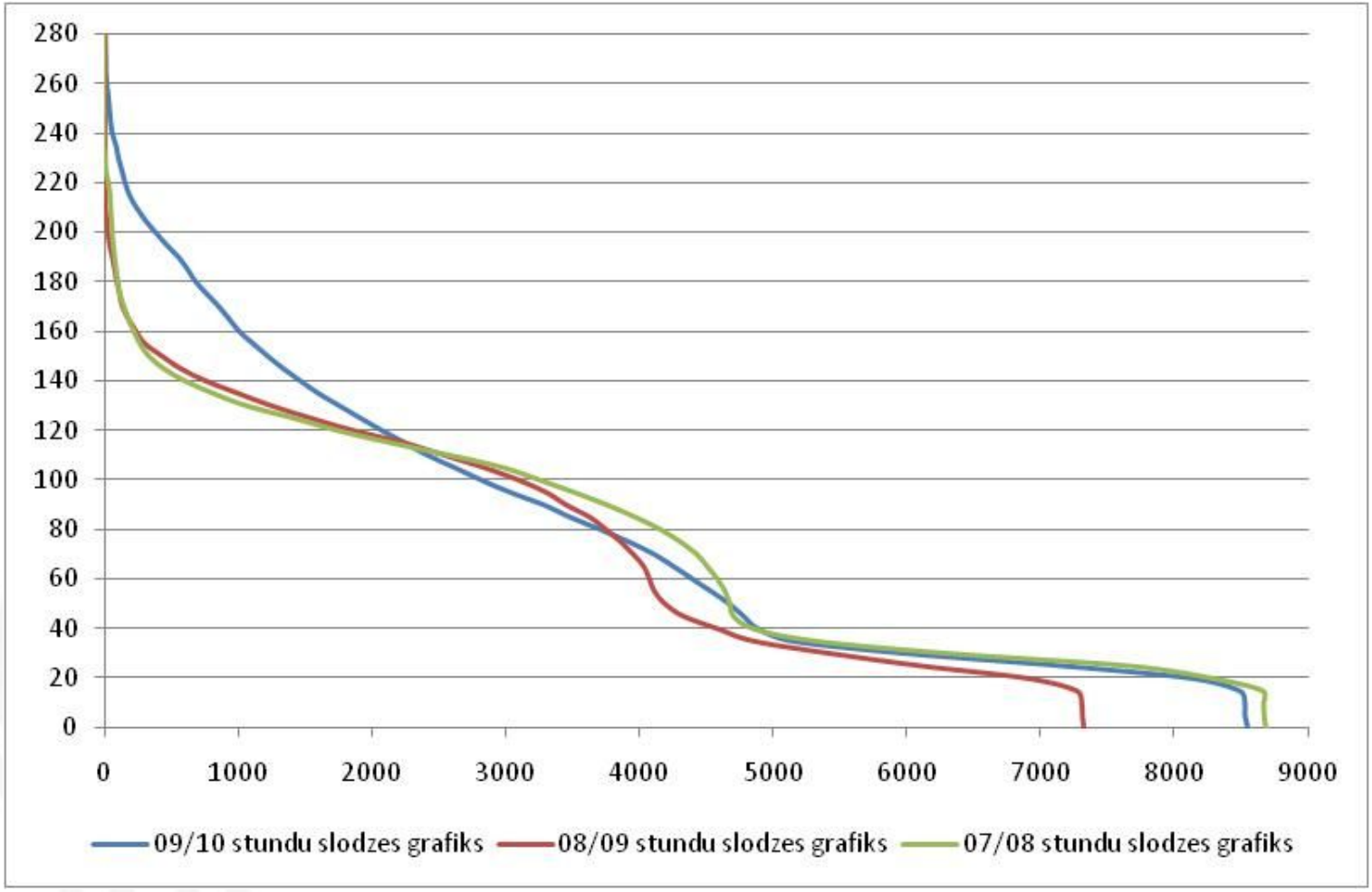

Heat production

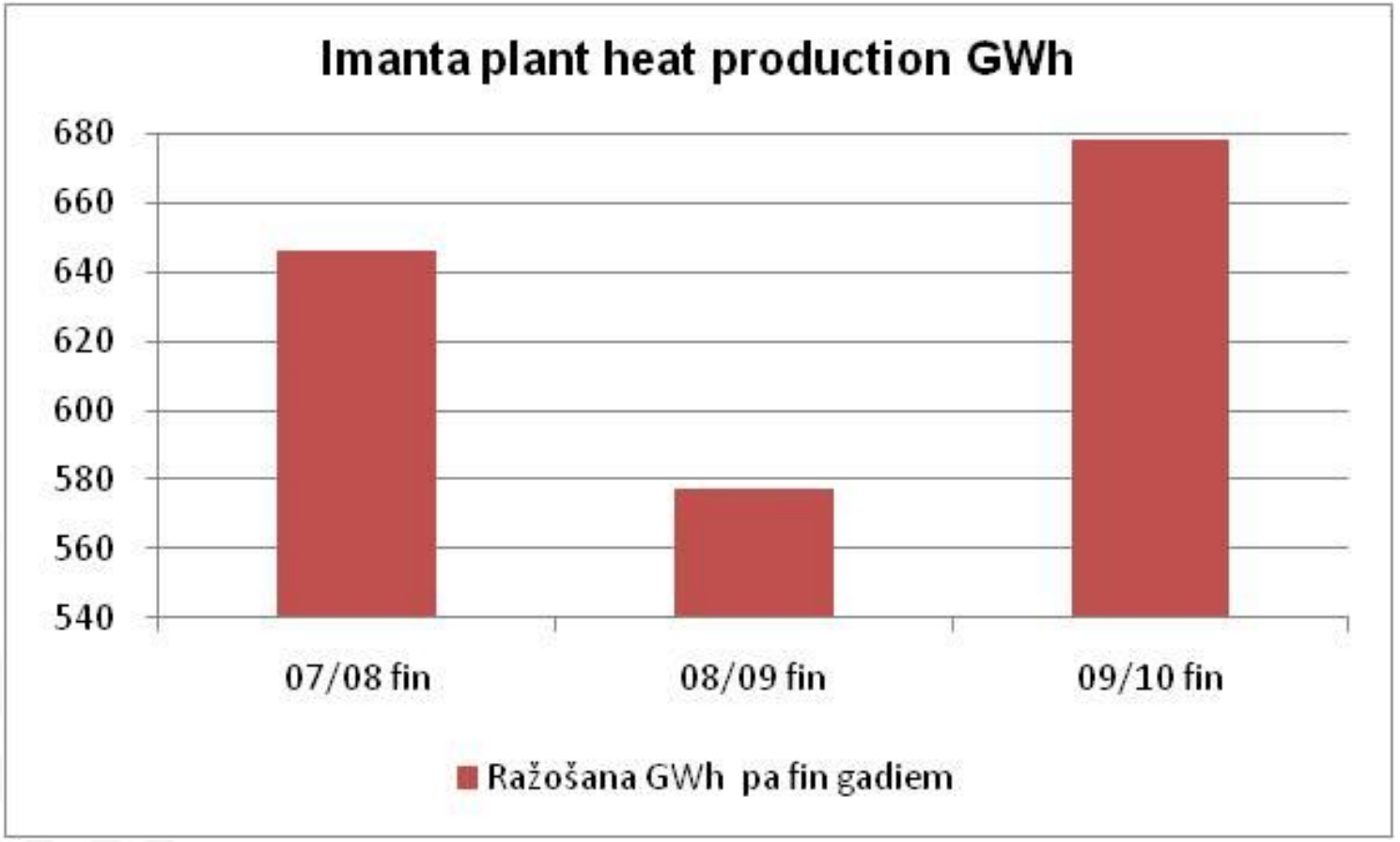

IMANTA Powerplant heat output curve for corresponding ambient temperature

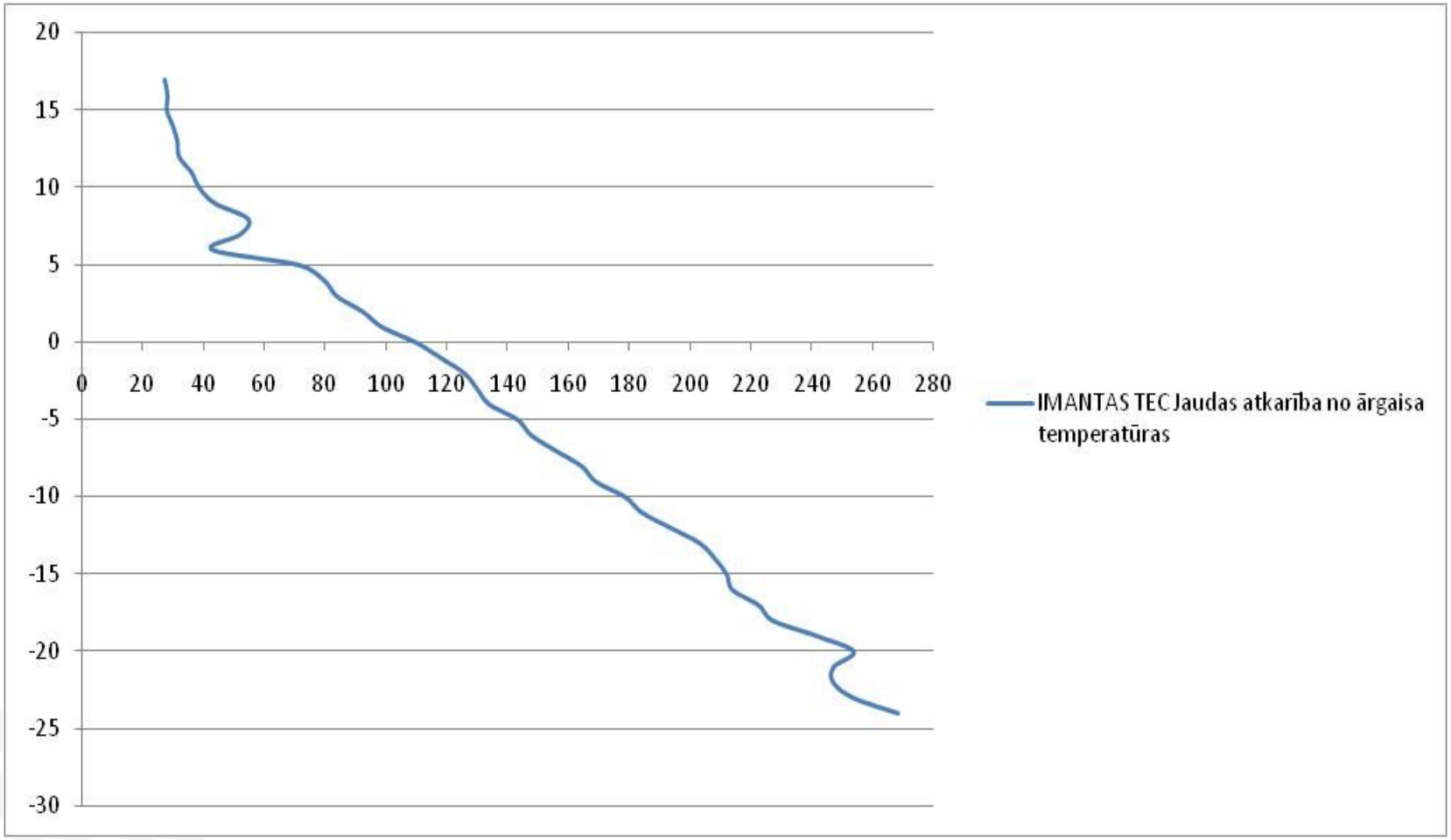

IMANTA Powerplant real and set point temperature graphs

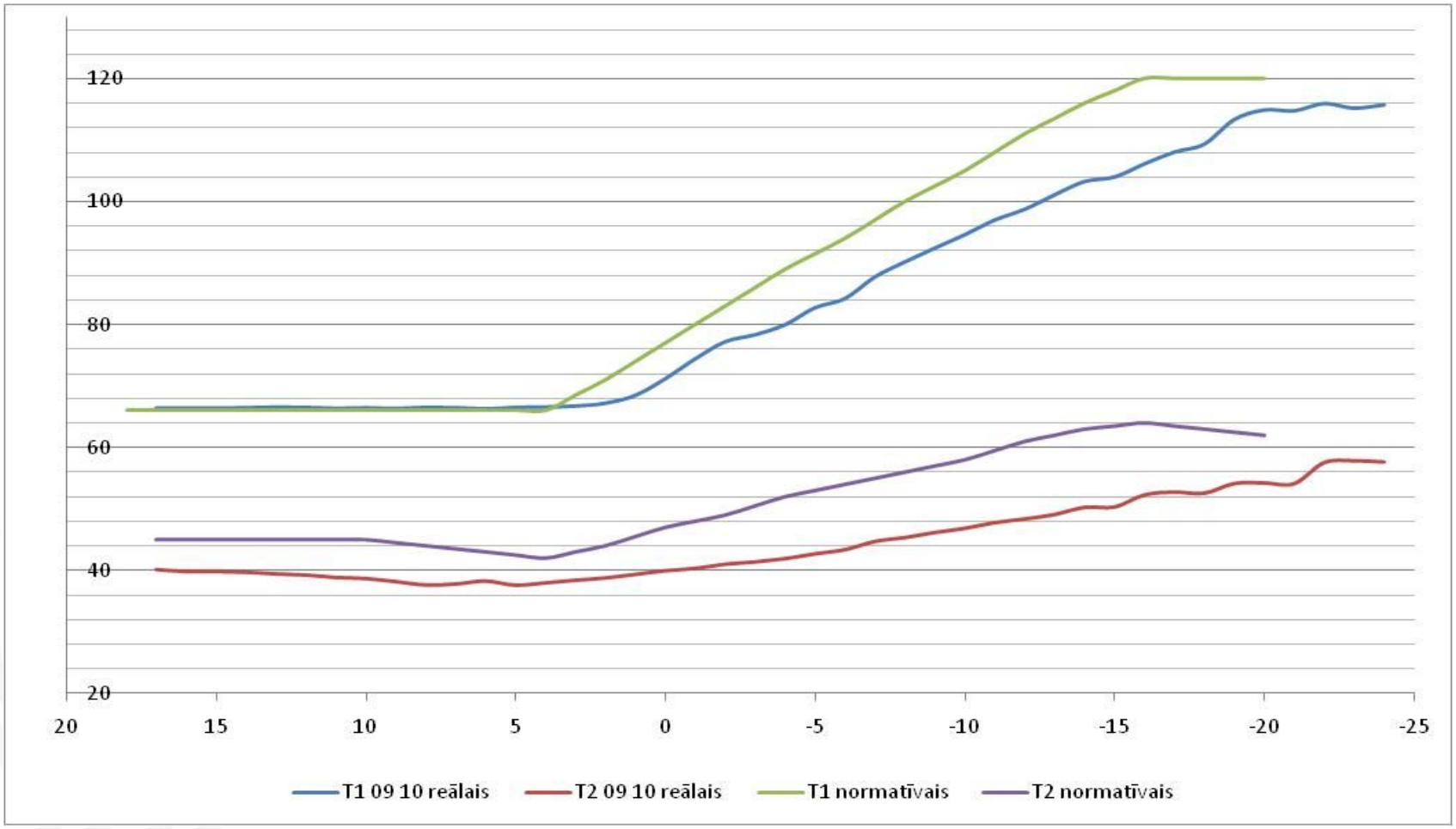

Condensing economizer production visualization

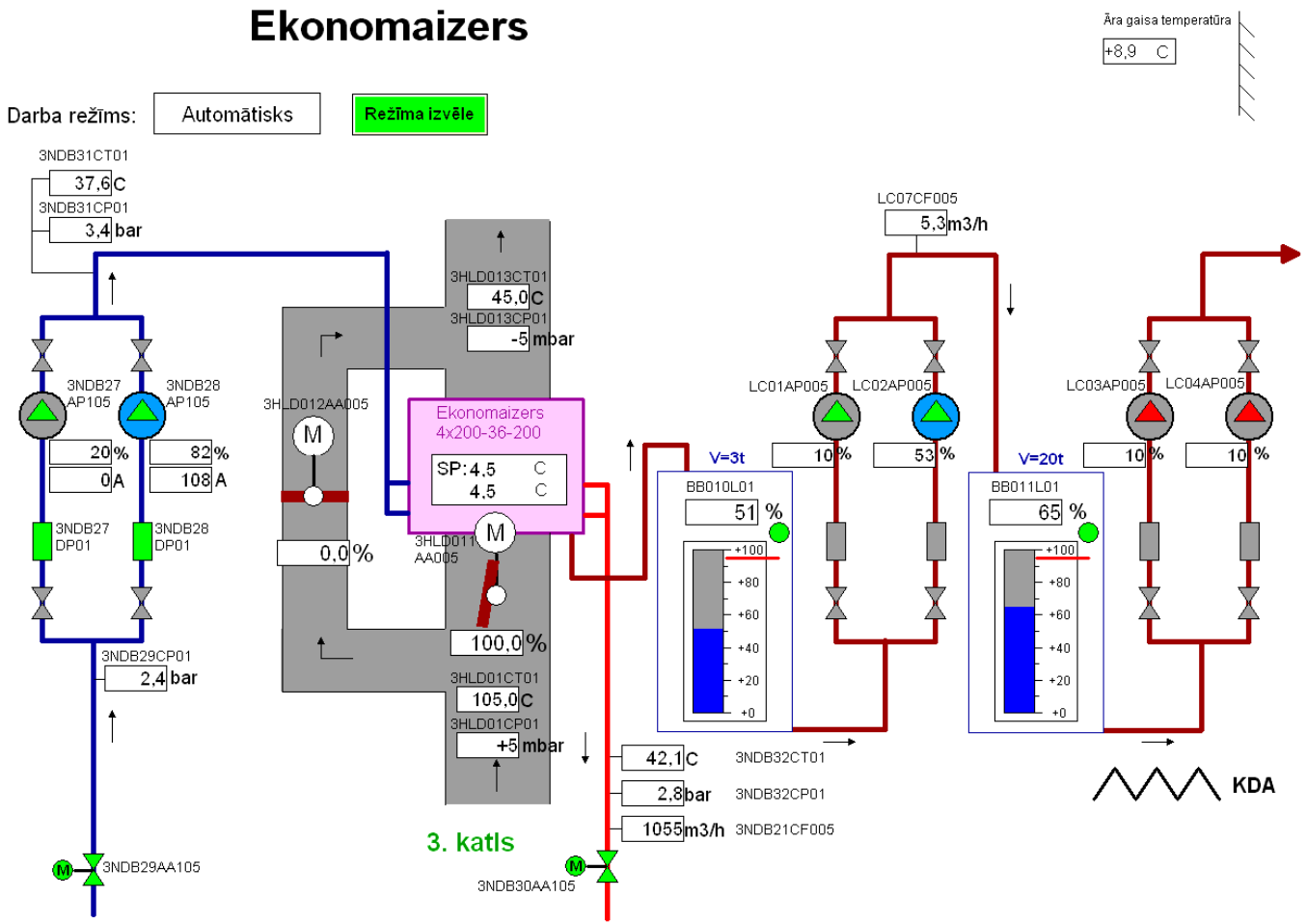

AKCIJU SABIEDRĪBA
RĪGAS SILTUMS

Imanta 10 MW condensing economizer

10 MW Condensing economizer drawing

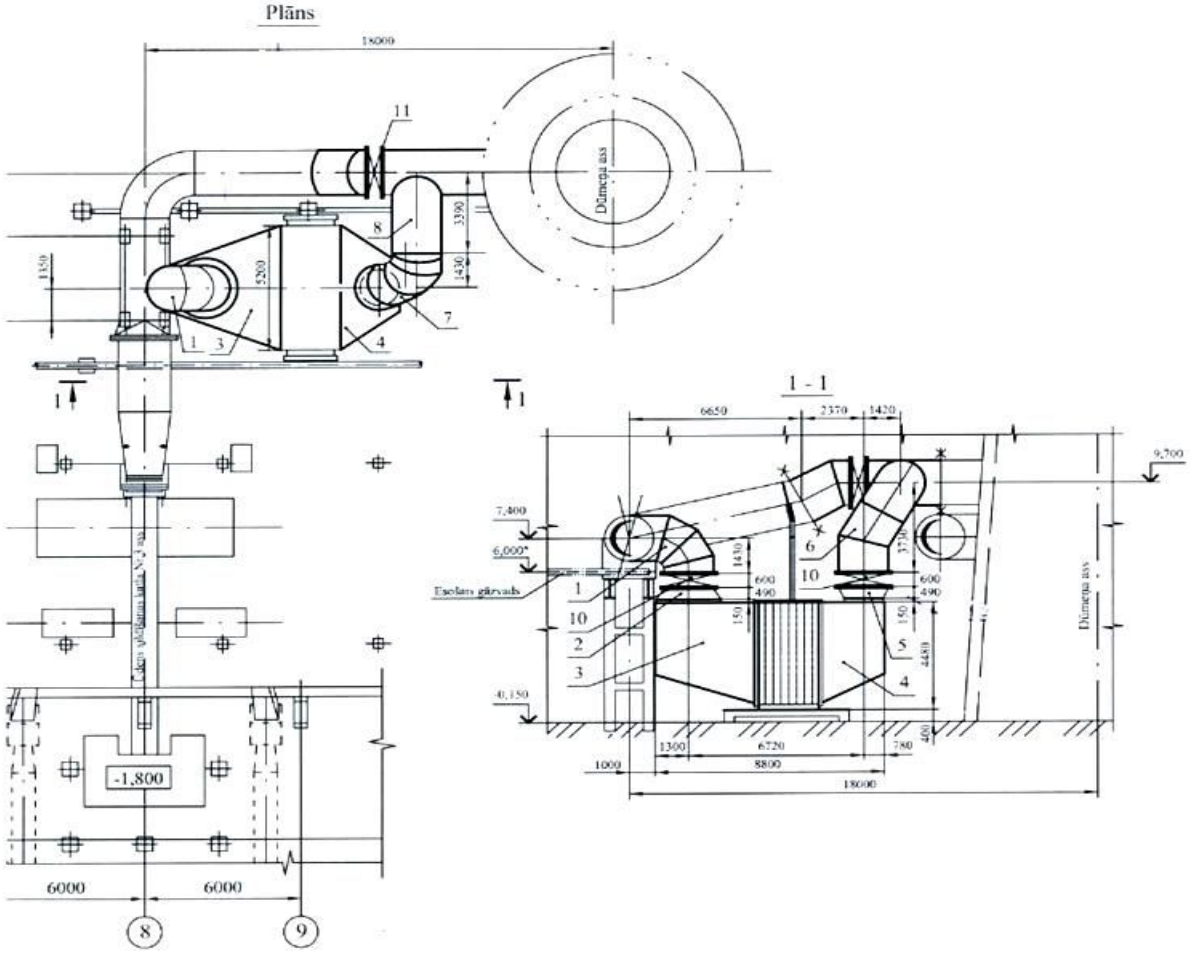

AKCIJU SABIEDRĪBA
RĪGAS SILTUMS

16.10.2009.

TRIJĀDĪBAS 5A Boilerhouse

Total installed capacity 19 MW, equipped with 4 condensing economizers

Absorption heat pump work

For effectivity improvement of Imanta CPU after feasibility study has been installed Li Br absorption heat pump. Total heat output 5 MW, cooling capacity 2MW.

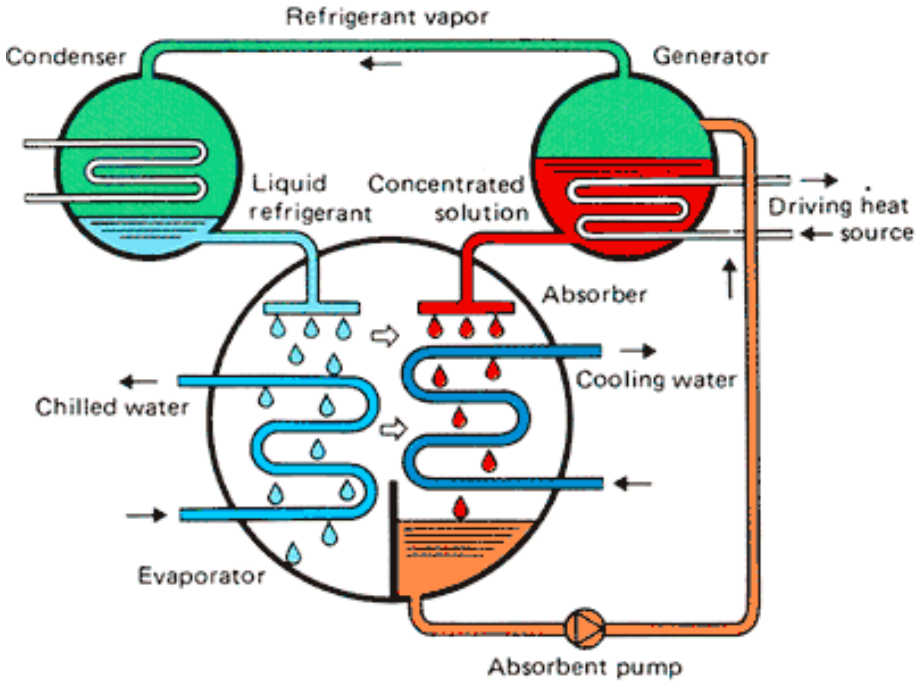

CPU Imanta 2MW heat pump

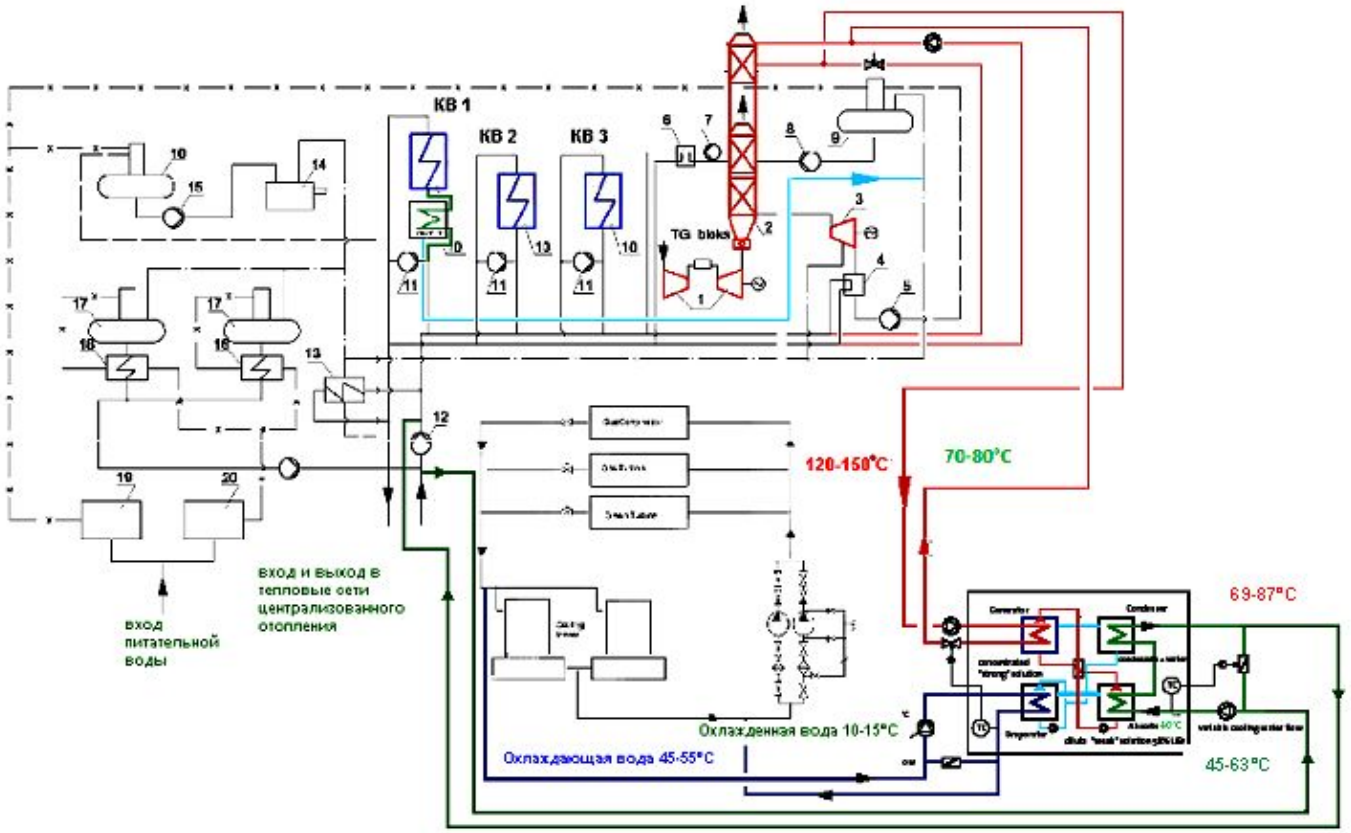

AKCIJU SABIEDRĪBA
RĪGAS SILTUMS

SC “Imanta” triģenerācijas iespējas

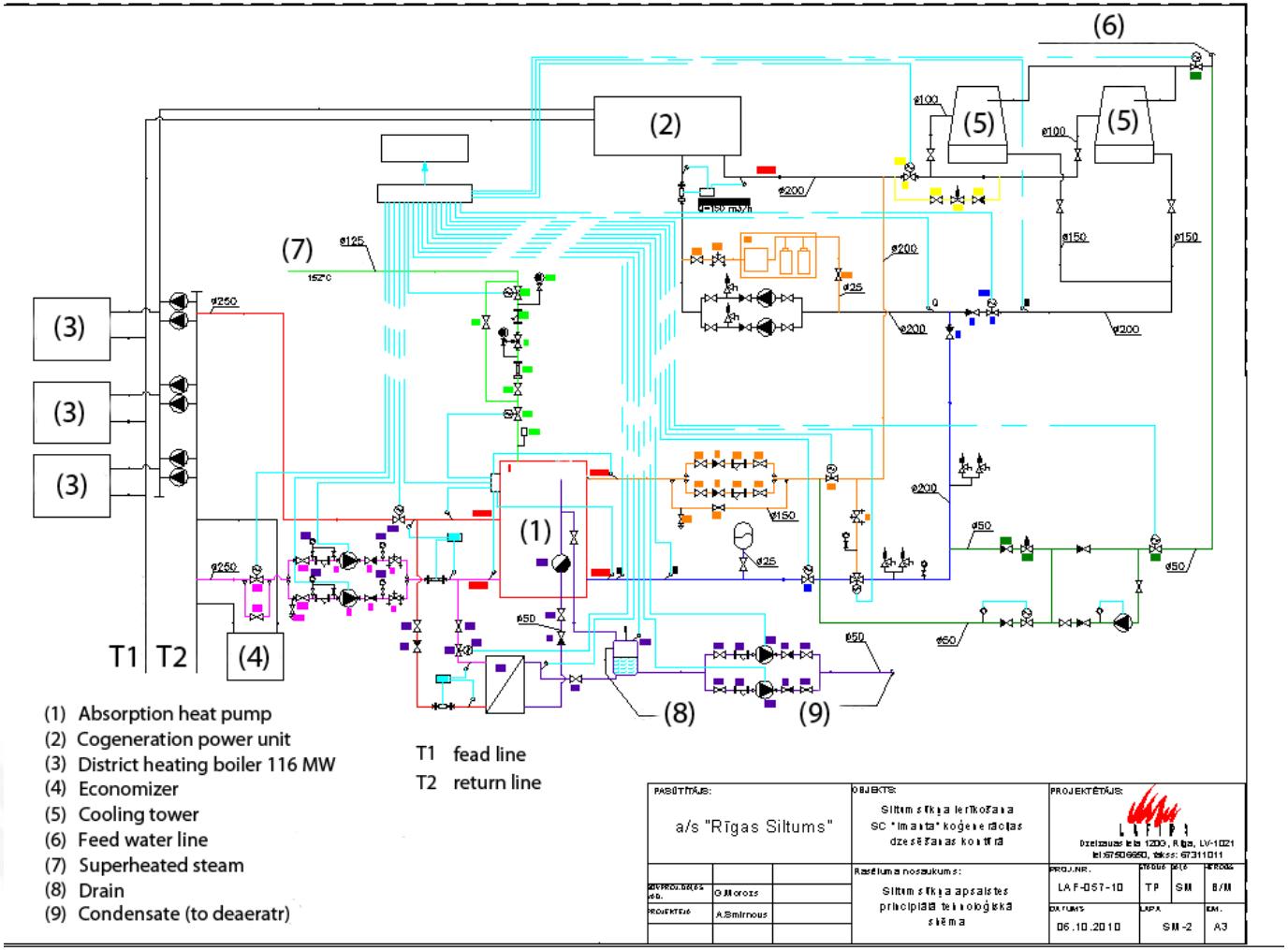

AKCIJU SABIEDRĪBA
RĪGAS SILTUMS

CPU Imanta trigeneration potential

To ensure absorbtion heat pump work steam (3MW) shall be supplied from auxilary boiler or CPU ST extraction. Particular heat pump allows to reduce natural gas consumption for heat production in CPU in total energetical value of 2 MW, which will not be blowed out in the air or drained im the suvage.

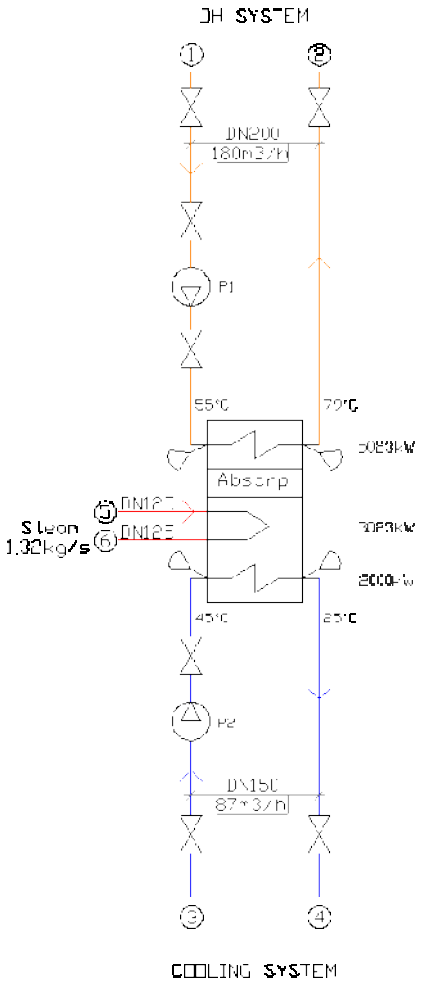

CPU Imanta trigeneration potential

Efficiency improvement, CO_2 emission reduction, electricity consumption reduction, minimizationof freezing risks

for cooling towers, reduction of cooling water consumption for least 20 000 t/annum – those

are the main benefits from hea pump implementation in Imant CPUa".

Thank You!